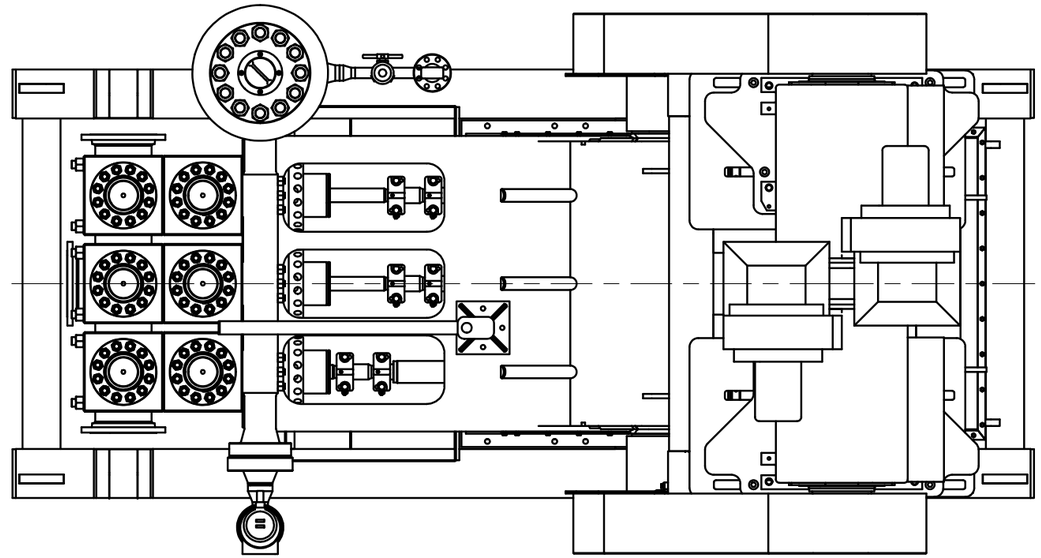

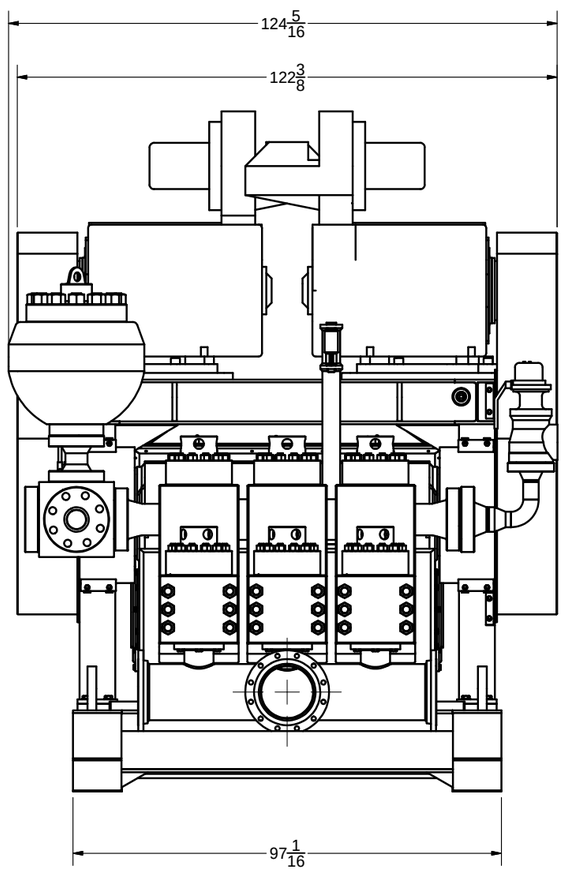

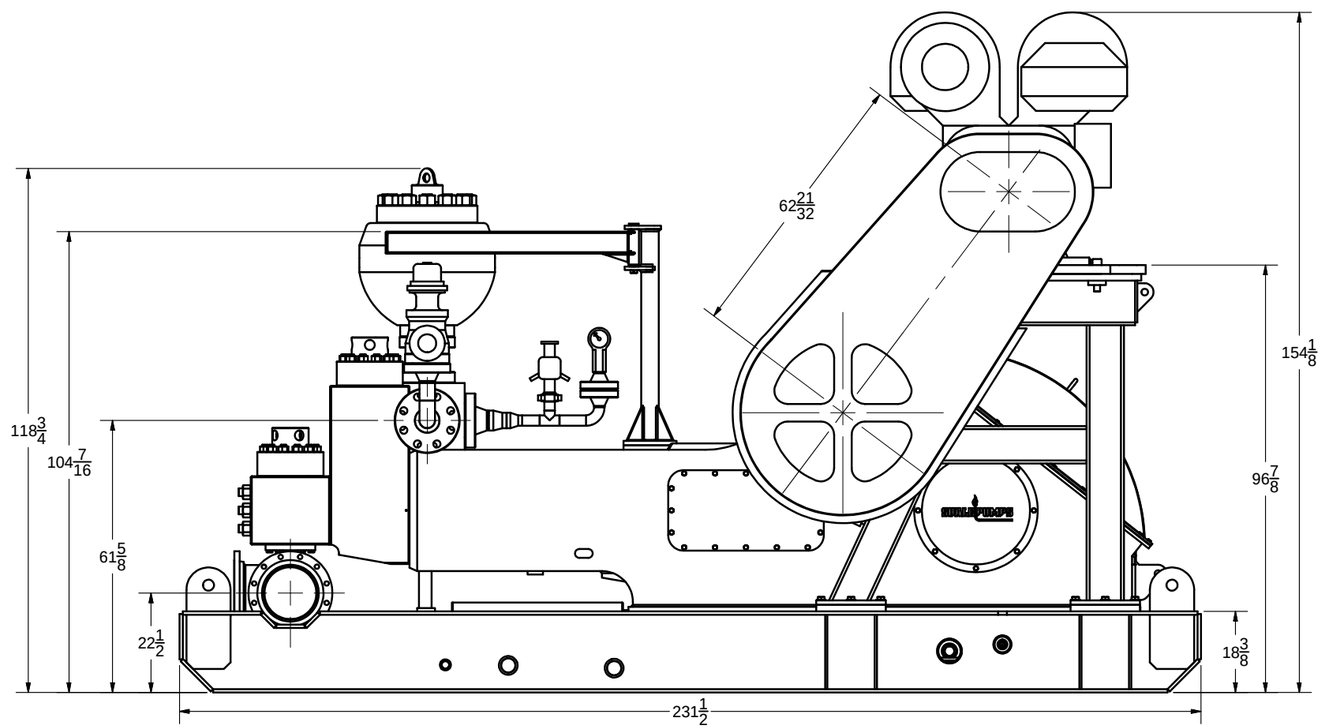

UNLESS OTHERWISE SPECIFIED			
DIMENSIONAL TOL.	DIMENSIONS ARE IN INCHES	DRAWN BY: Jason C. Williams	8/5/2014
FRACT. ~ ±1/16	BREAK SHARP CORNERS ~ .015	DESIGNED BY: Jason	8/14/2014
X.XXX ~ ±.005	FILLET RADII ~ .015	CHECKED BY:	
X.XX ~ ±.010	CONCENTRICITY ~ .001		
X.X ~ ±.015	SQUARENESS ~ .001	APPROVED BY:	
ANGLE ~ .50°	PARALLELISM ~ .001		
SURFACE RMS 250	RFS EXCEPT WHEN Ⓜ MODIFIED	QA	
MATERIAL:			

ShalePumps

TITLE

SP-2200L
TOP MOUNT A INSTALLATION DRAWING

SIZE	DWG NO	REV
C	S1571002	C

SCALE = NTS

SHEET 1 OF 1